WCM4A2

CEILING MOUNT

DESCRIPTION

Ceiling mount. It combines an easy position adjustment with vandal proof protection. It is suitable for housings with internal cable management. The sealing rings OWBIP2 or OWBIP3 ensure a housing of IP66 protection.

TECHNICAL DATA

MECHANICAL

Made of aluminium

Internal cable management

Load rating: 15kg (33.5lb)

Length: 412mm (16.2in)

500mm (19in) linear extension available with WCMPA

Unit weight: 1.3kg (2.8lb)

PART NUMBER

WCM4A2	Ceiling bracket with internal cable channel

PACKAGE

Model Number	Weight	Dimensions (WxHxL)	Master carton
WCM4A2	1.7kg (3.7lb)	10.5x37x37cm (4x14x14in)	6

TECHNICAL DRAWINGS

The indicated measurements are expressed in millimetres.

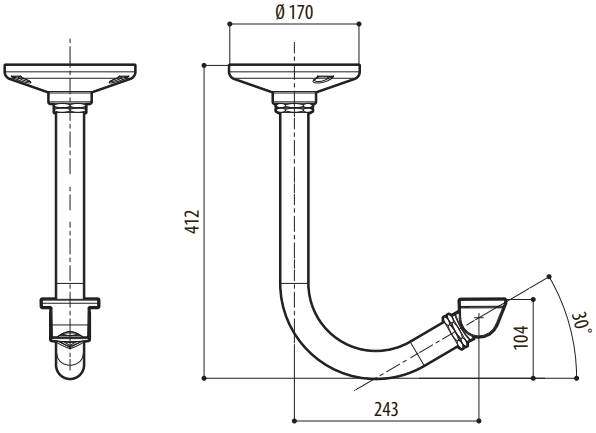

MAXIMUM INCLINATION

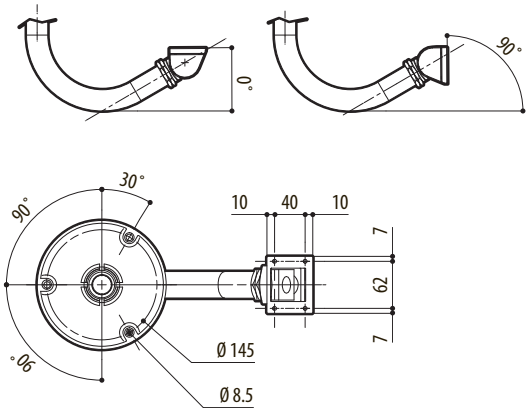

WCM4A2

Specifications subject to change without notice. © VIDEOTEC s.r.l. All rights reserved. The mentioned names of products or companies are trademarks or registered trademarks.